Name:_____

Exam Question Booklets
OCR Physics A

Booklet 14
15 Questions
133 marks

Things to remember:

✓

✓

✓

✓

✓

✓

✓

1

Fig. 3.1 shows the variation with the potential difference V of the resistance R of a tungsten filament lamp.

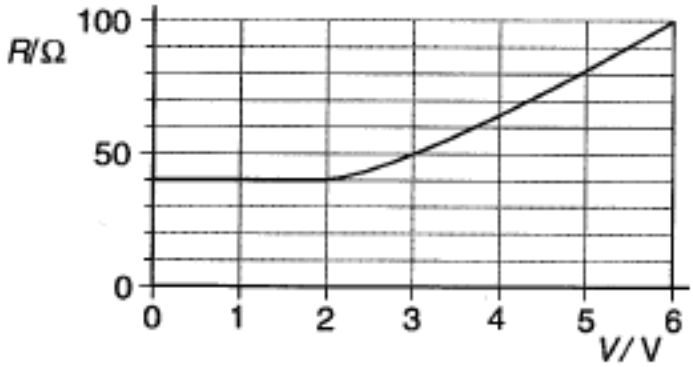

Fig. 3.1

(a) Use Fig. 3.1 to calculate, for a p.d of 3.0 V,

(i) the current in the lamp,

current = ... A [3]

(ii) the power dissipated by the lamp.

power = ... W [2]

(b) **(i)** Suggest why the resistance of the lamp does not change significantly over the range 0 to 2.0 V.

..... [1]

(ii) The tungsten filament lamp is at room temperature when the p.d. across it is zero.

1. State the resistance of the lamp at room temperature.

resistance = ... Ω [1]

2. The resistivity of tungsten at room temperature is $5.4 \times 10^{-8}\,\Omega\,\text{m}$. The filament has a radius of $1.0 \times 10^{-5}\,\text{m}$. Calculate the cross-sectional area A and length l of the filament.

A = ... m^2

l = ... m

Comment on the length of the filament.

.....

..... [5]

2

(a) Two coherent light wavetrains meet at a point and *interfere destructively*. Explain what this means and state two conditions that must be fulfilled before **totally destructive** interference can occur.

.....

.....

.....

..... [3]

(b) Fig. 3.1 shows an experiment to demonstrate interference effects with microwaves. A transmitter, producing microwaves of wavelength λ, is placed in front of two slits separated by a distance a. A receiver is used to detect the strength of the resultant wave at different points in front of the slits.

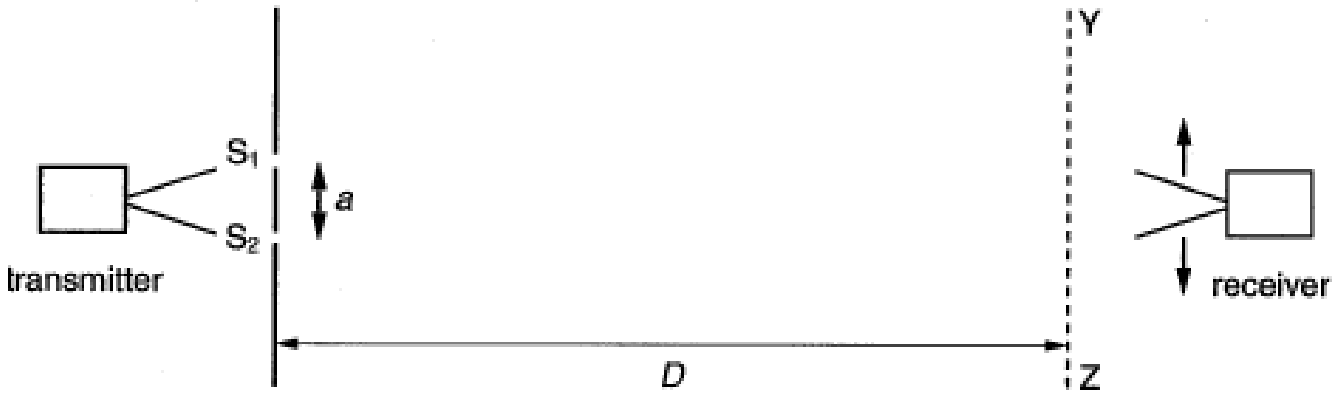

Fig. 3.1

(i) Explain, in terms of the path difference between the wavetrains emerging from the slits S_1 and S_2, why a series of interference maxima are produced along the line YZ.

.....

.....

.....

.....

..... [2]

(ii) Assuming that the interference of the microwaves is similar to double slit interference using light, state in terms of a, D and λ, an expression for the distance x between neighbouring minima on the line YZ.

.....

..... [1]

(iii) Use your answer to **(ii)** to predict how x would change if the distance a was doubled.

.....

..... [2]

(c) Explain why it is necessary to use a barrier with two slits rather than two separate transmitters.

.....

..... [2]

3

(a) Explain what is meant by the *principle of superposition*.

.....

.....

..... **[2]**

(b) In an experiment to produce observable interference fringes, two coherent, monochromatic (one wavelength) light sources, $\mathbf{S_1}$ and $\mathbf{S_2}$, are placed in front of a white screen, as shown in Fig. 5.1.

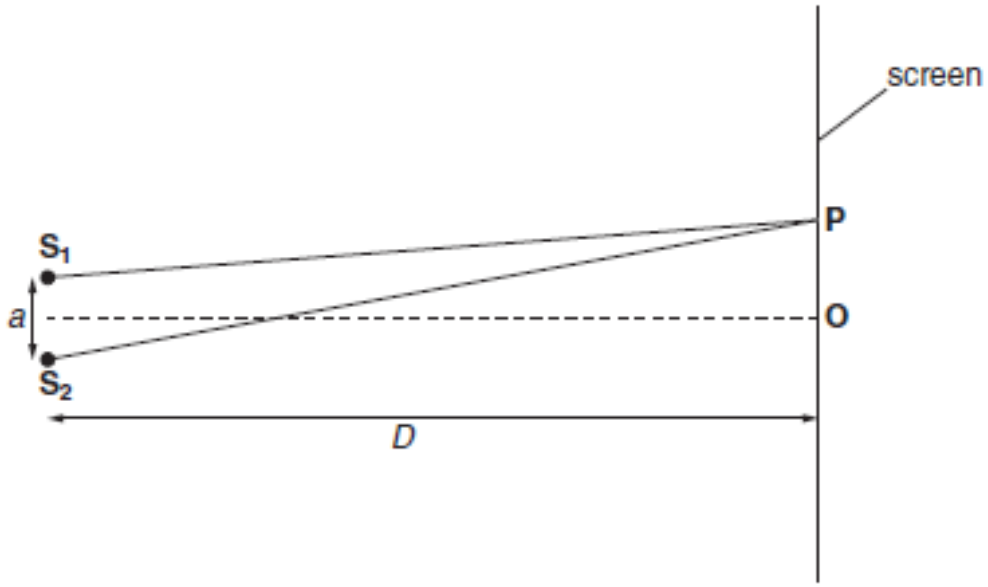

Fig. 5.1

(i) The point **P** is the position of the **first dark** (minimum intensity) fringe closest to the central bright (maximum intensity) fringe at **O**. State, in terms of the wavelength λ, the path difference between $\mathbf{S_1P}$ and $\mathbf{S_2P}$.

path difference = ... **[1]**

(ii) Show on Fig. 5.1 the approximate position of the **first bright** fringe on the screen closest to the central bright fringe at **O**. Label this **B**. **[1]**

(iii) In a particular experiment, the distance D from the sources to the screen is 1.6 m. The wavelength of the light is 6.4×10^{-7} m and the distance between **O** and **P** is 3.6 mm. Calculate the distance a between the sources $\mathbf{S_1}$ and $\mathbf{S_2}$.

a = ... m **[3]**

4

(a) Define electrical resistance.

.....

.....

.....[2]

(b) Fig. 3.1 shows part of an electrical circuit.

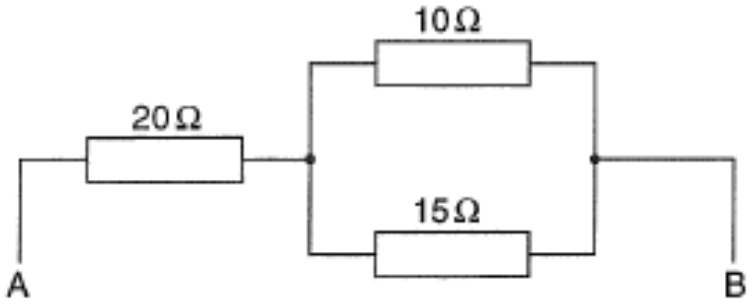

Fig. 3.1

Calculate the total resistance between A and B.

resistance = ... Ω [3]

(c) Fig. 3.2 shows a negative temperature coefficient (NTC) thermistor connected to a 24 V power supply of negligible internal resistance. The ammeter has negligible resistance.

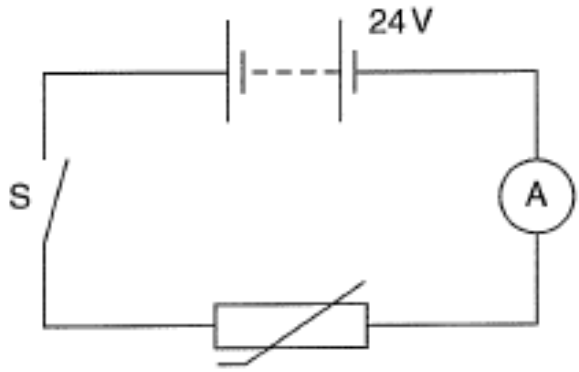

Fig. 3.2

(i) When the switch S is closed, the ammeter reading is 28 mA. Calculate the power dissipated by the thermistor.

power = ... W [3]

(ii) A few minutes after closing the switch, the current has increased to a constant value of 40 mA. Explain why the current increases.

.....

.....

.....[2]

5

A cell has an e.m.f of 1.28 V and an internal resistance *r*. Fig. 4.1 illustrates an external resistor of resistance 1.10 Ω placed across the terminals of this cell.

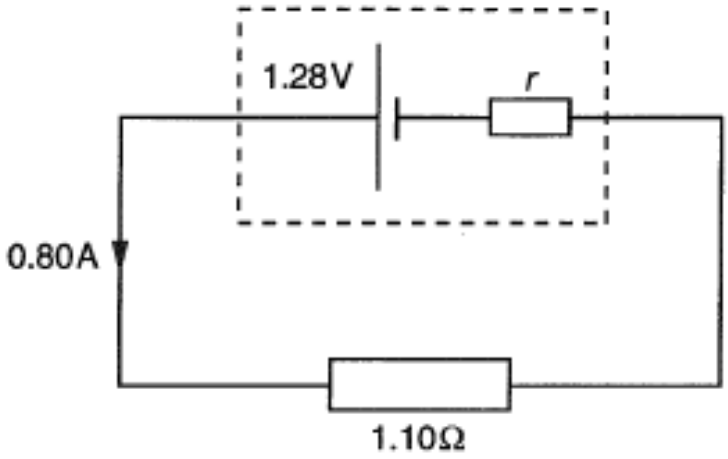

Fig. 4.1

The cell provides a current of 0.80 A. Calculate

(i) the total resistance of the circuit,

resistance = ... Ω [2]

(ii) the internal resistance *r*,

r = ... Ω [2]

(iii) the p.d. across the terminals of the cell.

p.d = ... V [1]

6

(a) Fig. 4.1 shows an electrical circuit.

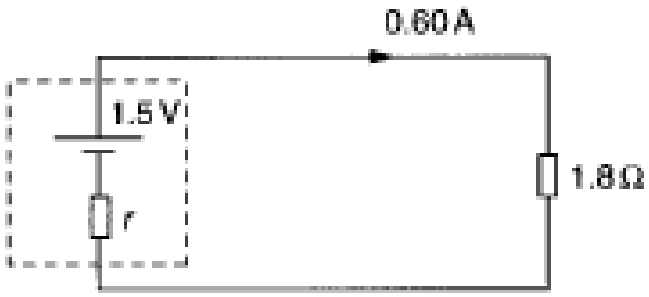

Fig. 4.1

The cell has e.m.f. 1.5 V and internal resistance r. The current drawn from the cell is 0.60 A. Calculate the internal resistance of the cell.

r = ... Ω [3]

(b) Fig. 4.2 shows a filament lamp and two resistors connected to a d.c. supply.

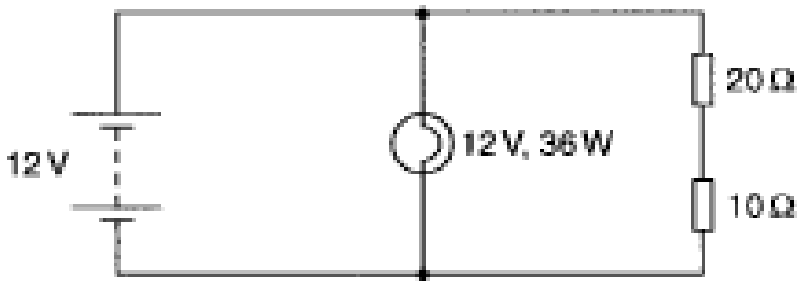

Fig. 4.2

The d.c. supply has negligible internal resistance.

(i) The filament lamp is rated as '12 V, 36 W'. Calculate the resistance of the filament lamp when used in this circuit.

resistance = ... Ω [2]

(ii) Calculate the total resistance of this circuit.

resistance = ... Ω [3]

(iii) Calculate the ratio

$$\frac{\text{current in the filament lamp}}{\text{current in the 20 Ω resistor}}.$$

ratio = ... [2]

7 **(a)** State **one** similarity and **one** difference between progressive waves and standing waves.

similarity

.....

.....

difference

.....

..... [2]

(b) A standing sound wave can be produced in an air column by blowing across the open end of a tube as shown in Fig. 5.1.

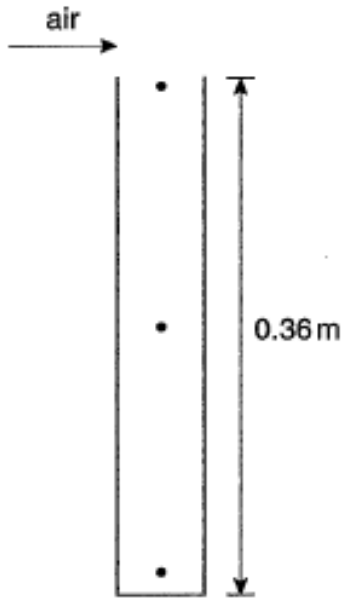

Fig. 5.1

The length of the tube is 0.36 m. The air column in the tube is sounding its lowest (fundamental) frequency note.

(i) Add **arrowed** lines to the dots in Fig. 5.1 to show the direction of movement and relative amplitudes of the air at these positions. [3]

(ii) Calculate the wavelength of the sound produced.

wavelength = ... m [1]

(iii) The speed of sound in air is $330\,m\,s^{-1}$. Determine the frequency of this standing wave.

frequency = ... Hz [2]

(iv) Determine the value of the lowest frequency of the note produced in a tube of this length but open at **both** ends. Show your reasoning.

lowest frequency = ... Hz [3]

8

Fig. 5.1 shows a string stretched between two points **P** and **Q**.

Fig. 5.1

(a) Suggest how a standing wave could be created on the string.

.....

.....[1]

(b) **(i)** Draw on Fig. 5.2 the shape of the standing wave when the string vibrates in its fundamental mode, i.e. the lowest frequency.

Fig. 5.2

.....[1]

(ii) The distance between **P** and **Q** is 1.2 m. Calculate the wavelength of this standing wave.

wavelength = ... m [1]

(c) Draw on Fig. 5.3 the shape of a standing wave whose frequency is 3 times that of the fundamental frequency. Label the position of all nodes (N) and antinodes (A).

[3]

Fig. 5.3

(a) A **transverse** wave pulse moves along a slinky coil. State how any single coil in the slinky will move as the pulse passes it.

.....

.....

.....

.....

.....

..... [2]

(b) Fig 5.1 shows a large measuring cylinder. The air column in the cylinder can be made to produce a note by blowing horizontally across the top of the cylinder.

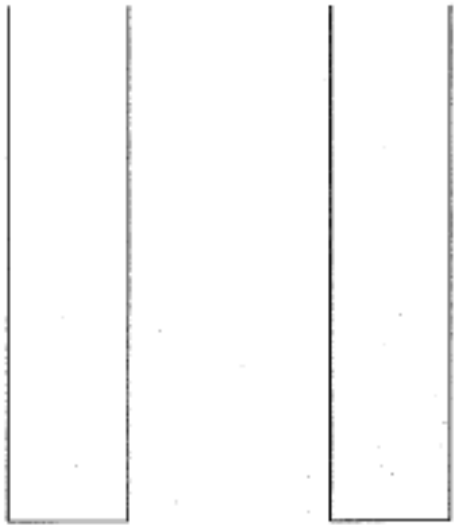

Fig. 5.1 **Fig. 5.2**

(i) State the direction in which the particles in the air column move when the note is produced.

..... [1]

(ii) The air column in Fig. 5.1 is producing its lowest frequency note (the fundamental). Label on Fig. 5.1 the positions in the cylinder of a node, with the letter **N**, and an antinode with the letter **A**. [1]

(iii) The length of the air column is 0.40 m and the speed of sound in air is 320 m s^{-1}. Calculate the frequency of the lowest (fundamental) note.

frequency = ... Hz [3]

(iv) Label on Fig. 5.2 the positions of nodes (**N**) and antinodes (**A**) when a note of higher frequency is being produced. [2]

(a) Fig. 4.1 shows components of an incomplete electrical circuit.

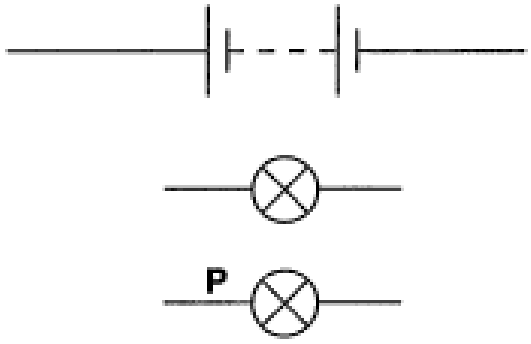

Fig. 4.1

Complete the circuit of Fig. 4.1 to show how both lamps, connected in parallel, may be lit using the battery. Include an ammeter to measure the current in the lamp **P**. [2]

(b) Fig. 4.2 shows a circuit designed to monitor the speed of rotation of a small fan.

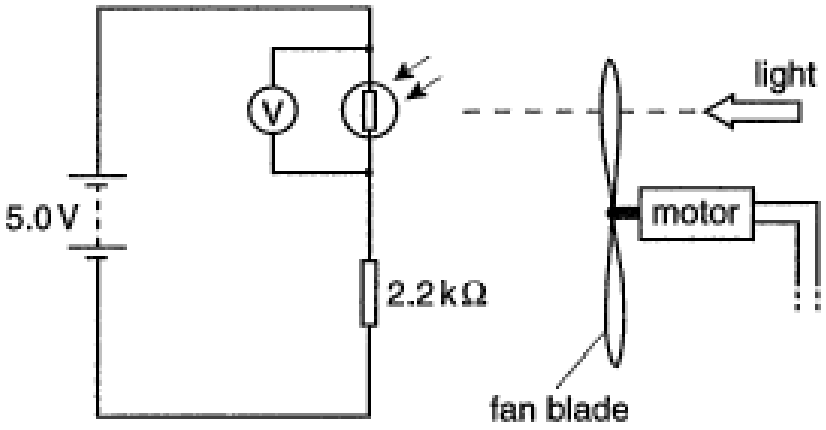

Fig. 4.2

The battery has negligible internal resistance. The output voltage V from the circuit is equal to the potential difference across the LDR. Fig. 4.3 shows the variation of the output voltage V with time t.

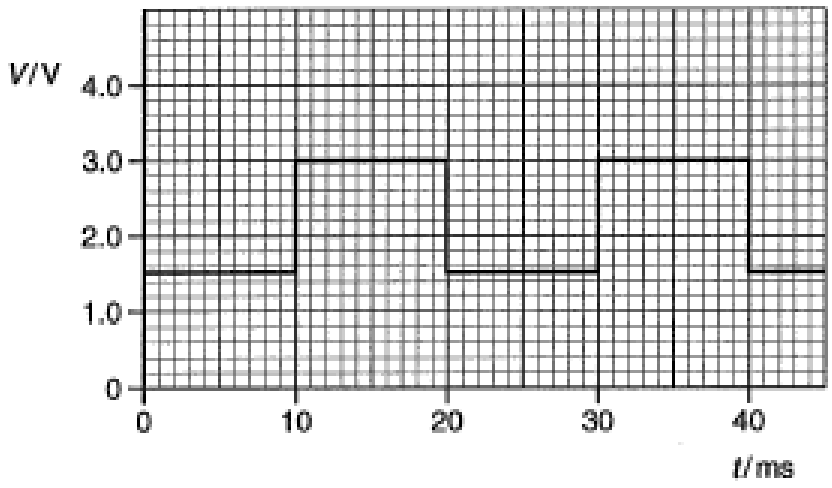

Fig. 4.3

(i) Explain why the graph of Fig. 4.3 shows two levels of output voltage.

.....

.....

.....

.....

.....

.....

..... [3]

(ii) For the **maximum** value for the output voltage V, calculate

1. the potential difference across the 2.2 kΩ resistor

potential difference = ... V [1]

2. the resistance of the LDR.

resistance = ... Ω [2]

A potential divider circuit based on a light-dependent resistor (LDR) is shown in Fig. 5.1. The supply has negligible internal resistance.

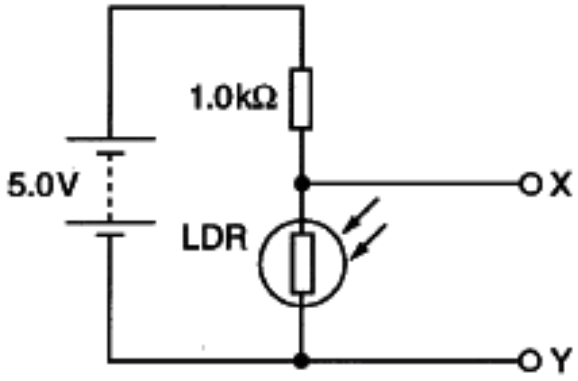

Fig. 5.1

(a) The light intensity falling upon the LDR is increased. State

(i) how the resistance of the LDR changes,

.....

..... [1]

(ii) how the p.d. across the LDR changes.

.....

..... [1]

(b) At a particular light intensity, the resistance of the LDR is 420 Ω.

(i) Calculate the p.d across the LDR.

p.d. = ... V [3]

(ii) An electronic circuit of resistance 50 Ω is connected between the terminals X and Y.

1. Show that the total resistance of the parallel combination of this electronic circuit and the LDR is about 45 Ω.

[1]

2. Calculate the p.d. across this electronic circuit.

p.d. = ... V [2]

(a) Show that the unit for electrical resistivity is $\Omega\,m$.

[1]

(b) Fig. 4.1 shows a simple design for a 'movement' sensor used in an earthquake region. The supply has negligible internal resistance.

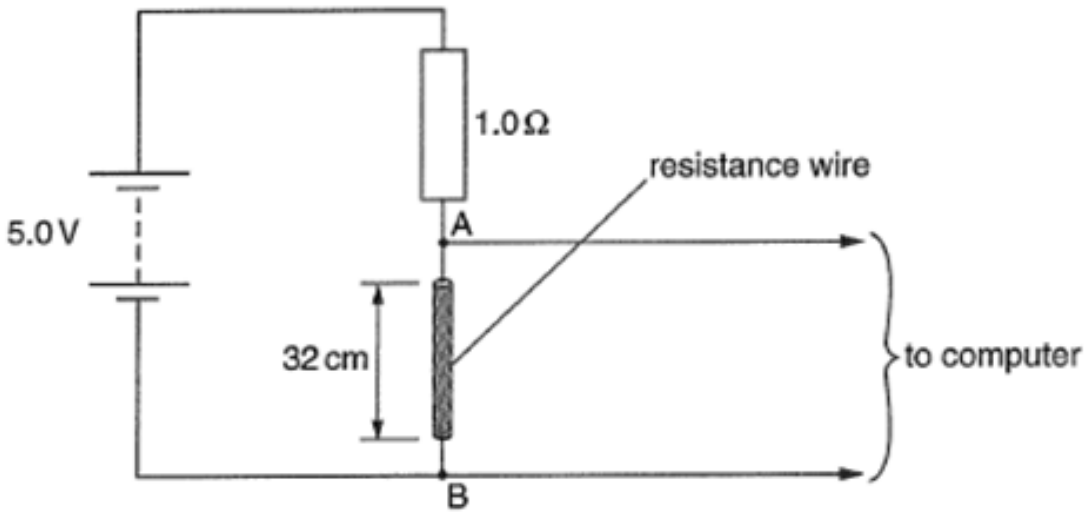

Fig. 4.1

A resistance wire is stretched between two rigid steel plates, not shown in the diagram. During an earthquake, ground movement changes the separation between the plates and so the length of wire changes.

The wire has a radius of 0.62 mm and length 32 cm. It is made of a material of resistivity $6.8 \times 10^{-6}\ \Omega\,m$.

(i) Show that the resistance of the wire is $1.8\,\Omega$.

[3]

(ii) Calculate the potential difference (p.d.) between A and B.

p.d. = ... V [3]

(iii) The length of the wire increases. State and explain the effect on the p.d. between A and B.

.....

.....

.....[2]

13

(a) Describe two properties of a photon.

.....

.....

.....

..... **[2]**

(b) Our Sun is one of the many billions of stars in our galaxy. The Sun emits photons at all energies. The Sun emits electromagnetic radiation intensely in the visible range of average wavelength 5.5×10^{-7} m as shown in Fig. 8.1.

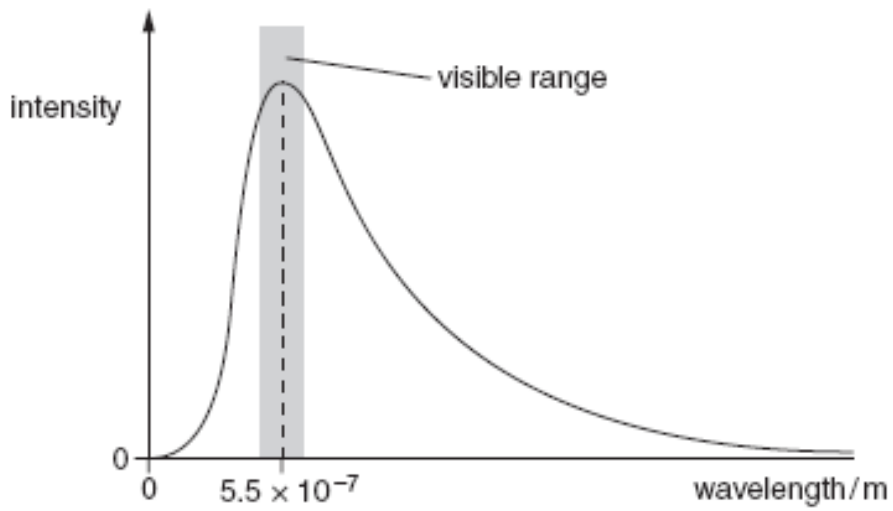

Fig. 8.1

In the visible range of average wavelength 5.5×10^{-7} m, the radiant power emitted per unit area of the Sun's surface is 6.3×10^{7} W m^{-2}. The total surface area of the Sun is 6.1×10^{18} m^{2}.

(i) Calculate the energy of a single photon of wavelength 5.5×10^{-7} m.

energy = ... J **[2]**

(ii) Calculate the total number of photons emitted per second from the surface of the Sun in this visible range of average wavelength 5.5×10^{-7} m.

number of photons per second = ... s^{-1} **[2]**

(iii) Some cooler stars in our galaxy emit electromagnetic radiation intensely at a wavelength that is 100 times longer than the wavelength of 5.5×10^{-7} m. Name the region of the electromagnetic spectrum in which the radiation of such stars will be most intense.

.....

..... **[1]**

(a) In atomic and nuclear physics, the electronvolt (eV) is a convenient unit of energy. Define one electronvolt and state its value in joules.

.....

.....

.....[2]

(b) Insert the missing words in the following passage describing some important aspects of the photoelectric effect.

In the photoelectric effect, a single photon interacts with a single electron at the surface of the metal. In this interaction, ... is conserved. Albert Einstein summarised this interaction in terms of his famous Nobel prize-winning equation

$$hf = \phi + \frac{1}{2} m v_{max}^2$$

where hf is the energy of the ..... , ϕ is the work function energy of the metal and $\frac{1}{2} m v_{max}^2$ is the maximum kinetic energy of the ..... .

[3]

(c) When the surface of a particular metal is exposed to a weak source of electromagnetic radiation of wavelength 3.2×10^{-7} m, electrons of **negligible** kinetic energy are released from the metal.

(i) Calculate the work function energy of the metal in joules and in electronvolts (eV).

work function energy = ... J

work function energy = ... eV [4]

(ii) Describe the effect on the electrons when the incident radiation is of longer wavelength.

.....

.....

.....[2]

15

(a) The concept of the photon was important in the development of physics throughout the last century. Explain what is meant by a photon.

.....

.....[1]

(b) Fig. 7.1 shows a photocell.

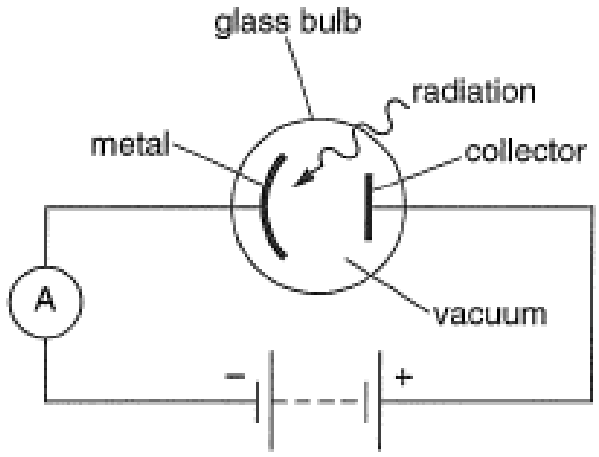

Fig. 7.1

When the metal surface is exposed to electromagnetic radiation, photoelectrons are ejected. The collector collects the photoelectrons and the sensitive ammeter indicates the presence of a tiny current.

(i) For a certain frequency and intensity of radiation, the ammeter shows a current of 1.2×10^{-7} A. Calculate

1. the charge reaching the collector in 5.0 s

charge = ... C

2. the number of photoelectrons reaching the collector in 5.0 s.

number of electrons = ...
[3]

(ii) The work function energy of the metal is 3.5×10^{-19} J and the incident radiation has frequency 7.0×10^{14} Hz. Calculate the maximum kinetic energy of an ejected photoelectron.

energy = ... J [3]

(iii) The intensity of the incident radiation is doubled but the wavelength is kept constant. State the effect this has on each of the following

1. the energy of each photon

   .....

   .....

2. the maximum kinetic energy of each photoelectron

   .....

   .....

3. the current in the photocell.

   .....

   .....

[3]